MD15-FTL-HE, MD15-FTL-DA and MD15-FTL-OV Radio Small Actuators

Application

Wirelessly controlled, battery-powered small actuator for room temperature control

For thermostat valve bodies for direct mounting on commercially available radiator valves for room-specific temperature control in heating systems.

The actuator is controlled wirelessly based on the non-proprietary EnOcean wireless protocol.

The following EnOcean Equipment Profile (EEP) is supported:

- EEP A5-20-01 Battery Powered Actuator

Content Page

Important Information Regarding Product Safety 2
MD15-FTL-HE, MD15-FTL-DA and MD15-FTL-OV Radio Small Actuators 3
Technical Data 3
Accessories (not included in delivery) 3
Dimensions 4
Radio Small Actuator Functions 5
Wireless Interface 7
EnOcean Equipment Profiles EEP A5-20-01 (Battery Powered Actuator) 8
General Information 11
Valve Installation 12
Installing the Radio Small Actuator 13
Removing the Radio Small Actuator 16
Commissioning 18
Teaching in the MD15-FLT-xx on a Radio Partner 19
Deleting the Radio Partner 19
Performing a Communication Test 20
Switching Valve Block Protection On and Off 20
Switching the Energy Block (Automatic “Window Open” Recognition) On and Off 21
Manual adjustment 21
Replacing Batteries 22

Änderungen vorbehalten - Contents subject to change - Sous réserve de modifications - Reservado el derecho a modificación - Wijzigingen voorbehouden - Con riserva di modifiche - Innehåll som skall ändras - Změny vyhrazeny - Zmiany zastrzeżone - Возможны изменения - A változtatások jogát fenntartjuk - 保留未经通知而改动的权力

Important Information Regarding Product Safety

Safety Instructions

This data sheet contains information on installing and commissioning the product "MD15-FLT-HE, MD15-FTL-DA, MD15-FTL-OV". Each person who carries out work on this product must have read and understood this data sheet. If you have any questions that are not resolved by this data sheet, you can obtain further information from the supplier or manufacturer.

If the product is not used in accordance with this data sheet, the protection provided will be impaired.

Applicable regulations must be observed when installing and using the device. Within the EU, these include regulations regarding occupational safety and accident prevention as well as those from the VDE (Association for Electrical, Electronic & Information Technologies). If the device is used in other countries, it is the responsibility of the system installer or operator to comply with local regulations.

Mounting, installation and commissioning work on the devices may only be carried out by qualified technicians. Qualified technicians are persons who are familiar with the described product and who can assess given tasks and recognize possible dangers due to technical training, knowledge and experience as well as knowledge of the appropriate regulations.

Legend

WARNING

Indicates a hazard of medium risk which can result in death or severe bodily injury if it is not avoided.

CAUTION

Indicates a hazard of low risk which can result in minor or medium bodily injury if it is not avoided.

NOTICE

Indicates a hazard of medium risk which can result in material damage or malfunctions if it is not avoided.

NOTE

Indicates additional information that can simplify the work with the product for you.

Notes on Disposal

For disposal, the product is considered waste from electrical and electronic equipment (electronic waste) and must not be disposed of as household waste. Special treatment for specific components may be legally binding or ecologically sensible. The local and currently applicable legislation must be observed.

MD15-FTL-HE, MD15-FTL-DA and MD15-FTL-OV Radio Small Actuators

MD15-FTL-HE	Wireless small actuator for valves with an M30x1.5 connection manufactured by Heimeier, Honeywell-MNG, Junkers, Honeywell-Baukmann, Oventrop (1998 and later), Cazzaniga, etc.
MD15-FTL-DA	Wireless small actuator for valves that were manufactured by Danfoss of the RA-N, RA-FN or RA-U series
MD15-FTL-OV	Wireless small actuator for valves with an M30x1 connection manufactured by Oventrop (before 1998)

Technical Data

Nominal voltage	Battery-operated, 3 alkaline AA batteries (LR6 1.5 V 3,400 mAh)
Battery life	Approx. 3 years (depending on frequency and method of operation)
Measuring system	Integrated digital temperature sensor; 0 °C to 40 °C; ±0.5 °C at 25 °C
Interfaces	technoLink® wireless interface: ■ Radiogram: EnOcean radiogram ■ EEP A5-20-01 (Battery Powered Actuator) ■ Frequency: 868.3 MHz ■ Operating range: Approx. 30 m in buildings (depending on building structure) ■ Duty cycle: < 1 % ■ Transmission and reception interval: 10 min.
Motor switch-off	Actuator spindle: extending = load-dependant, retracting = path-dependant
Indicator	Status LED
Actuating noise	<31 dB (A)
Nominal stroke	Up to 3 mm
Travel time	15 s/mm
Positioning force	100 N (nominal)
Position indicator	Stroke range scale
Manual adjustment	Only when disconnected from the power supply Socket for hexagon key under the actuator cover, key socket 4 mm
Housing	RAL 9010 pure white, battery compartment cover with mechanical locking mechanism
Ambient temp.	0 °C to 200 °C
Degree of protection	IP40
Installation position	Anywhere from vertical to horizontal
Maintenance	Maintenance-free
Weight	180 g

■ When used properly, this device complies with the requirements of the R&TTE Directive (1999/5/EC).

Accessories (not included in delivery)

Z220	Protective battery cover for MD15-FTL-xx
VS3	Anti-vandalism protector for MD15-xx-HE

Dimensions

- MD15-FTL-HE, MD15-FTL-OV

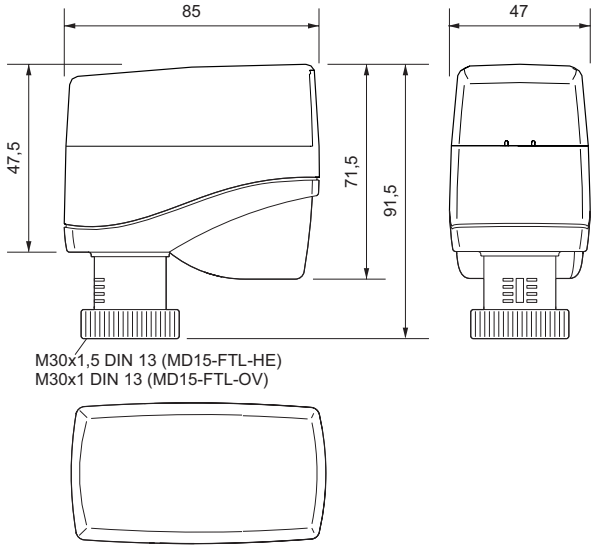

- MD15-DA

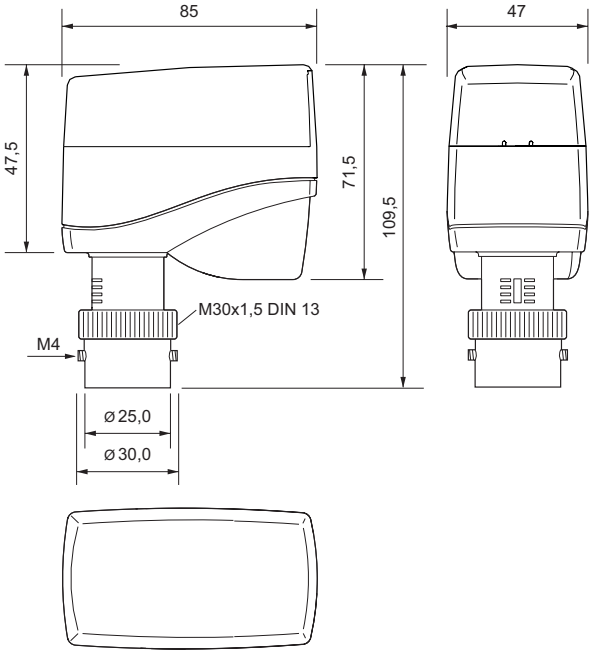

Radio Small Actuator Functions

Actuator mode

If a 0 to 100% EnOcean telegram is received from an external wireless partner for controlling the wireless small actuator, the internal loop controller is not active.

The transmitted actuating signal is translated into a positioning movement.

A suitable wireless single room controller takes over the control functions.

Self-controlling operation

The integrated room temperature controller is activated if no external 0 to 100% EnOcean wireless telegram is received.

- Without external operator panel (= emergency mode):

The temperature is controlled to a fixed setpoint of 20 °C using the integrated temperature sensor (actual value) and the integrated control function of the actuator.

- With external operator panel (EnOcean technology):

Using the operator panel, the users can freely determine the setpoint or enter their own schedule.

The actual value and the setpoint are transmitted via an EnOcean telegram (EEP A5-20-01).

The integrated control algorithm makes room control easy and convenient.

Battery monitoring

The battery capacity is continuously monitored. If the battery capacity is too low, a wireless signal is transmitted to the wireless partner and 2 acoustic signal tones are emitted in succession every 6 hours. If this message is activated, the remaining capacity of the batteries is < 10%.

NOTICE

The batteries must be replaced within the next 30 days.

As the battery capacity decreases, the interval between the audible signals becomes shorter and the number of signal tones increases to 4 signal tones in succession every 3 hours, then 8 in succession every 2 hours.

If the remaining battery capacity is insufficient to maintain motorized operation, the actuator moves into the safety position of 50%.

The wireless communication with the wireless partner still functions in this operating state.

Dynamic valve recognition

For optimized adaptation to the valve characteristic curve, the small actuator determines the working point of the valve.

Dynamic valve recognition runs continuously and adapts the operating mode to the changing properties, such as weather-based changes in the supply temperature and heating behavior of the room.

After changing the battery or after successfully teaching-in a wireless partner, the values of the dynamic valve recognition are reset to the factory settings. If the actuator is operating in summer mode, the dynamic valve recognition is inactive.

Valve block protection

Block protection prevents the cone from jamming when the valve is inactive for a long time. When block protection is active, the actuator performs a displacement of 50% once every 21 days.

If the remaining battery capacity is < 10% (see “Battery monitoring” section), this function is inactive.

Automatic closing point control

The small actuator continuously monitors the closing point and corrects it if necessary.

Communication test

The signal path to the wireless partner is checked.

Performing a communication test has no effect on the transmission/reception interval.

Energy block (automatic “Window open” recognition)

When a window is open, the flow of heat energy to the room is interrupted. An open window is signified by a large and rapid temperature drop at the MD15-FTL-xx small actuator. If such a drop is measured by the internal temperature sensor, the small actuator closes the valve for 30 min.

After 30 minutes, the small actuator returns to normal operation and the automatic “Window open” recognition function is active again.

If the remaining battery capacity is < 10% (see “Battery monitoring” section), this function is inactive.

Frost protection function

If the temperature at the integrated temperature sensor drops below 6 °C, the small actuator opens the valve until 8 °C is reached.

Summer mode

If the status message “Summer mode on” is received from an external wireless partner, the small actuator closes the valve.

The transmission/reception interval in summer mode is 60 minutes.

Wireless Interface

The communication with the wireless partner is cyclical, bidirectional and includes intelligent reception/transmission management.

Upon the first reception of the wireless telegram (for teaching-in a wireless partner, see page 19), the wireless small actuator automatically adapts its operating mode according to the method of control from the wireless partner (actuator mode or self-controlled mode).

NOTE

If the wireless small actuator is operating in “self-controlled mode” with an external operator panel and the wireless path/wireless communication is interrupted, the status bit “emergency mode” (=self-controlled mode) is set (can be evaluated for service diagnostics).

After the malfunction has been rectified (details can be found in the documentation of the wireless partner), the wireless partner is automatically resynchronized.

NOTICE

This product uses only EnOcean telegrams

When selecting a wireless partner, ensure that the wireless interface also works with the EnOcean telegram EEP A5-20-01 (Battery Powered Actuator).

EnOcean Equipment Profiles EEP A5-20-01 (Battery Powered Actuator)

DATA BYTES		**Notes**
Transmit mode:	Message from the actuator to the controller	
DB3:	Current Value value 0% to 100%, linear n=0 to 100	Positioning feedback of the current stroke position.
DB_2.BIT_7	Service on	BIT for evaluating whether service mode is active.
DB_2.BIT_6	Energy input enabled	- Not applicable for MD15-FTL-xx This BIT is required for actuators that have a wired power supply.
DB_2.BIT_5	Energy storage > xx% charged	- Not applicable for MD15-FTL-xx This BIT is required for actuators that have a wired power supply.
DB_2.BIT_4	Battery capacity < 10%	Monitoring of the battery capacity If the capacity of the batteries is below 10%, a message of Bit4 = 0 is issued.
DB_2.BIT_3	Contact, cover open	- Not applicable for MD15-FTL-xx BIT for evaluation of a cover contact
DB_2.BIT_2	Failure temperature sensor, out of range	BIT for evaluation of whether the temperature sensor is working correctly.
DB_2.BIT_1	Detection, window open	BIT for evaluating whether the “Window open” identification is active. The “Window open” identification occurs via the evaluation of the internal temperature sensor (gradient).
DB_2.BIT_0	Actuator obstructed	- Currently not used by MD15-FTL-xx All types of malfunctions are evaluated and reported (not in a differentiated manner, but only as a general malfunction message).
DB1:	Temperature 0 °C to 40 °C, linear n=0 to 255	Current measurement value of the internal temperature sensor

DATA BYTES		**Notes**
DB_0.BIT_7	Not used	
DB_0.BIT_6	Not used	
DB_0.BIT_5	Not used	
DB_0.BIT_4	Not used	
DB_0.BIT_3	LRN Bit 0b0 Teach-in telegram 0b1 Data telegram	The identification for the teach-in frame and the normal data frame is stored here. The teach-in wireless telegram is only sent to the wireless partner when the “Teach-in” function is activated.
DB_0.BIT_2 *	Self-controlled mode 0b0 off 0b1 on	Status message “Emergency mode ON/OFF” Active when the wireless connection is interrupted for long periods of time (= actuator in emergency mode)
DB_0.BIT_1	Not used	
DB_0.BIT_0	Not used	
Receive mode:	Commands from the controller to the actuator	
rx time = max. 1 s	**Note:** The bidirectional data transfer from the wireless partner to the wireless small actuator must be completely finished within a maximum time window of 1 s.	
DB3:	Valve position 0% to 100%, linear n=0 to 100 Temperature setpoint 0 °C to 40 °C, linear n= 0 to 255	The temperature value (setpoint) or control value is transferred here from the external wireless partner. The communication is synchronization-optimized. DB_1.BIT_2 determines which information is sent to the actuator.
DB_2:	Temperature actual from RCU 0 °C to 40 °C, n=255 to 0 Room controller unit	The current temperature value (actual value) or control value is transferred here from the external wireless partner. DB_1.BIT_2 is used to determine which information is sent to the actuator.

* Supported in version 2.32 and up

DATA BYTES		**Notes**
DB_1.BIT_7:	Run init sequence	Service function “Set zero point”. This function needs a suitable wireless partner that supports the function.
DB_1.BIT_6	Lift set	- Not applicable for MD15-FTL-xx Service function “Learn stroke”. It requires a suitable wireless partner that supports the function.
DB_1.BIT_5	Open valve	Service function “Forced OPEN”. It requires a suitable wireless partner that supports the function.
DB_1.BIT_4	Close valve	A “Forced CLOSED” service function is stored here. It requires a suitable wireless partner that supports the function.
DB_1.BIT_3	Summer bit, reduction of energy consumption	This BIT contains the “Summer function”. If the “summer bit” is transferred from the wireless partner, the communication cycle is extended from 10 minutes to 30 minutes. This reduces the energy consumption of the actuator during phases in which no heating occurs and has a positive effect on the service life of the batteries. The function must be supported by an external wireless partner of the actuator and can be optionally set.
DB_1.BIT_2	Setpoint selection DB_3 0b0 set point 0% to 100%, 0b1 temperature setpoint 0 °C to 40 °C	Here you specify whether the temperature measurement value or the actuating signal is made available to the wireless actuator as an input signal.
DB_1.BIT_1	Setpoint inverse	The inversion of the actuating signal is possible with this BIT.
DB_1.BIT_0	Function select 0b0 RCU 0b1 service on	You use this BIT to specify whether the actuator should operate in normal mode (RCU) or service mode (service on). It requires a suitable wireless partner that supports this function. If this BIT is in service mode (service on), the functions stored in BIT DB_1.BIT4 through DB_1.BIT7 can be used.

NOTE

You can find detailed information about the protocol description on the Internet page www.enocean.com “EnOcean Technology”.

General Information

- The actuator operates in a 10-minute communication cycle (except for summer bit = active; the cycle is 30 minutes in this case). There is no communication with the wireless partner on an automatic basis between these cycles.

  A connection can be established manually through a communication check triggered on the actuator (e.g. for checking the wireless path during commissioning). A complete data transfer does not occur when a communication check is manually triggered. The data relevant to the control technology is not updated.

  A new calculation of the control deviation and an associated repositioning of the valve occurs every 10 min. after the data exchange with the wireless partner.
- If the “summer bit” is transferred from the wireless partner, the communication cycle is extended from 10 minutes to 30 minutes. This reduces the energy consumption during phases in which no heating occurs and has a positive effect on the service life of the batteries..

  The function must be supported by an external wireless partner and can be optionally set.
- The external wireless partner determines when summer mode is active.

  This operating mode is active, for example, during the period in which no heating occurs (i.e., the primary power supply for heating is switched off).
- The batteries are dimensioned so that approx. 5,500 actuating cycles of 15 s each are possible.

  Avoiding an oscillating control circuit thus depends greatly on how the settings of the loop controller parameters (for external loop controllers) were selected.

  We recommend that the external loop controller be set to have as long a time delay as possible.
- The integrated temperature sensor has a default offset of 3 °K.
- If the small actuator (in “Self-controlled” mode with an external operator) is in “Resynchronization” mode, the send/receive interval of the small actuator is offset by one minute (10 + N x 1). This occurs until the wireless partner can be resynchronized.
- The automatic closing point check is carried out when the small actuator has not approached the zero point with a total stroke distance of 20 mm. The small actuator is then forced to approach the zero point.

Valve Installation

WARNING!

The valve may only be installed by qualified technicians. In addition to the generally valid installation guidelines, the following points are to be observed:

- The pipeline system and the interior of the fitting must be free of foreign objects. In the event of contaminated media, dirt collectors are to be inserted upstream of the valves with fine screens, mesh width 0.25 mm.
- There must be no tension between the valve and the pipeline connection.
- To avoid eddy formations in the valve body, the valve should be installed in a straight section of the pipe. A distance of 10 times the nominal diameter is recommended between the valve flange and manifold or other similar parts.
- The installation location is to be selected so that the ambient temperature at the actuator is kept between 0 – +50 °C.
- When carrying out installation, the permissible maximum pressure difference Δp and the specified direction of flow must be observed (see table in "Types" section).
- The three-way valves are to be used as mixing valves. Observe the specified direction of flow.
- Once the valve is installed, make sure the ball in the valve seating can be moved easily by pushing in the valve stem.
- Approximately 30 mm of free space is required above the actuator to install the actuator and remove the housing cover.
- For safety reasons, do not suspend the small actuators from under the valve.
- Observe the direction of flow arrow on the valve body. Inverting the direction of flow impairs control behavior.

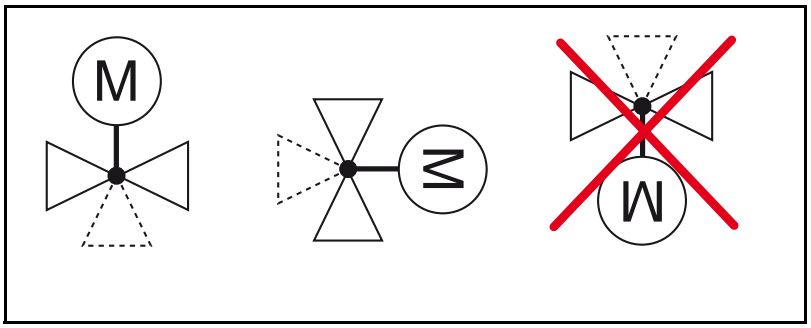

Installing the Radio Small Actuator

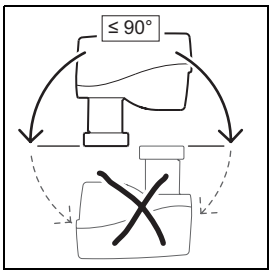

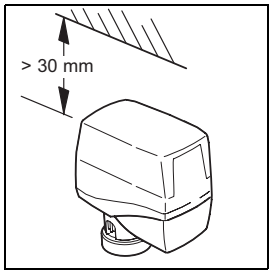

NOTICE

Insert the batteries with the correct polarity.

When inserting the batteries, observe the polarity as marked in the battery compartment.
Use only alkaline batteries (type: AA, LR6 1.5 V).

NOTE

After changing the batteries, the small actuator goes into storage mode (actuator spindle is retracted).

When the actuator receives a wireless signal, it switches over to normal operation.

- MD15-FTL-HE, MD15-FTL-OV

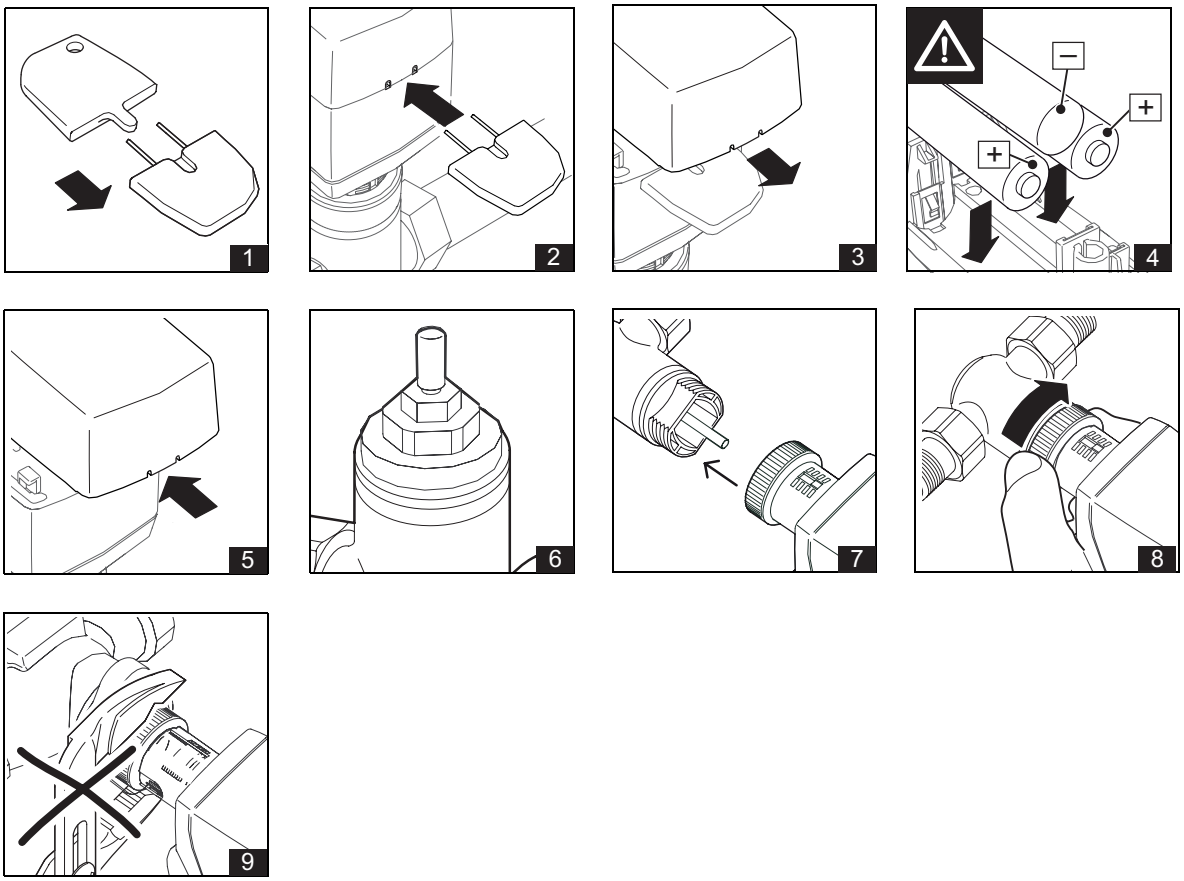

- Open the battery compartment cover using the special key supplied by inserting it into the intended place. Remove the cover.

  The special key is included with delivery of the small actuator.
- Inserting the batteries and close the battery compartment cover.
- Place the small actuator on the threaded connection of the valve and tighten hand-tight using the union nut.

- MD15-FTL-DA

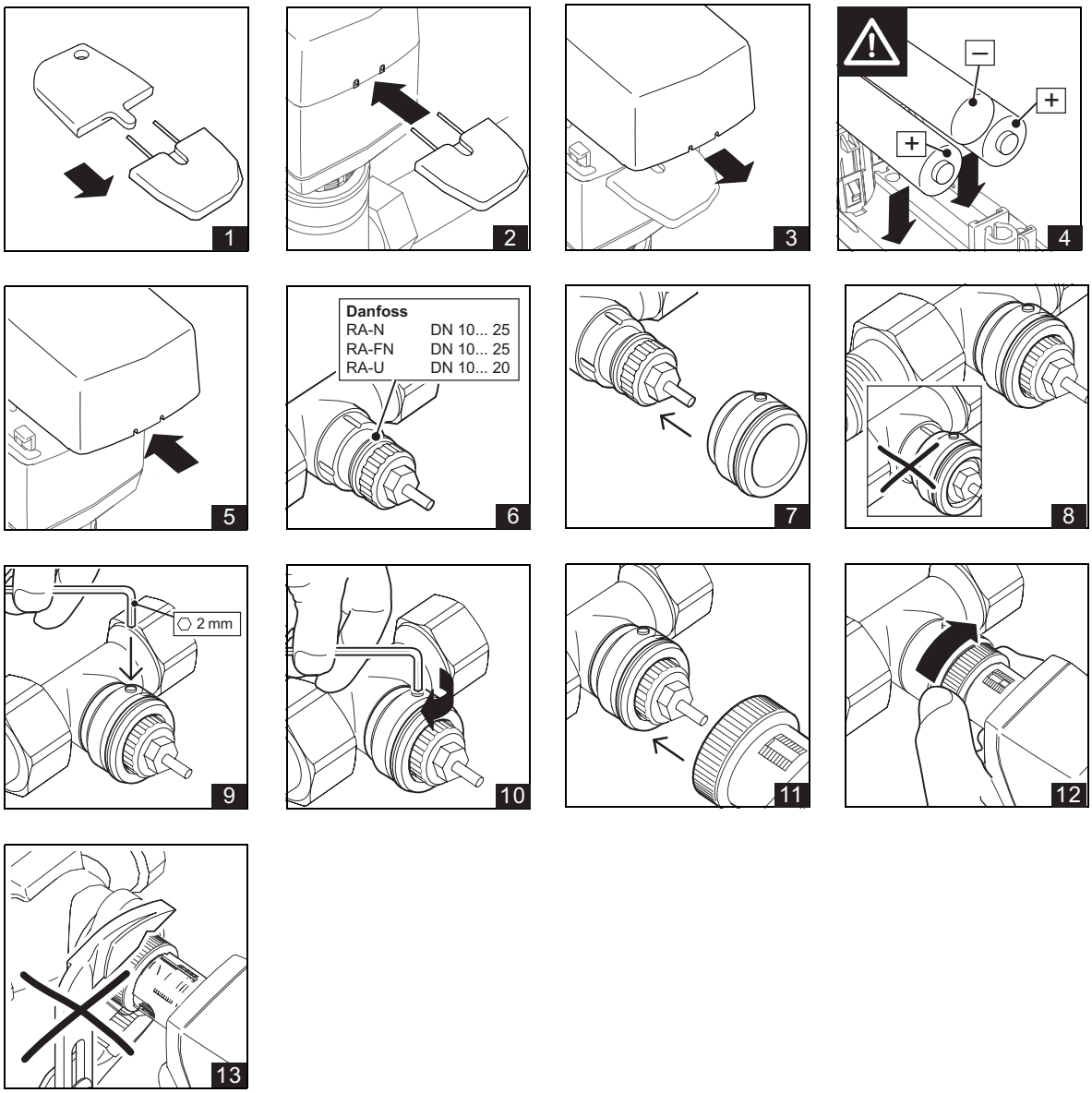

- Open the battery compartment cover using the special key supplied by inserting it into the intended place. Remove the cover.

  The special key is included with delivery of the small actuator.
- Inserting the batteries and close the battery compartment cover.
- Place the small actuator on the threaded connection of the valve and tighten hand-tight using the union nut.
- Place the valve adapter onto the valve and tighten the two set screws.

Removing the Radio Small Actuator

CAUTION

Before beginning to remove the unit, make sure that no differential pressure builds up in the valve body before beginning work. If necessary, close the gate valve and turn off pumps.

After the pipeline has cooled off, you can begin removal of the small actuator.

- MD15-FTL-HE, MD15-FTL-OV

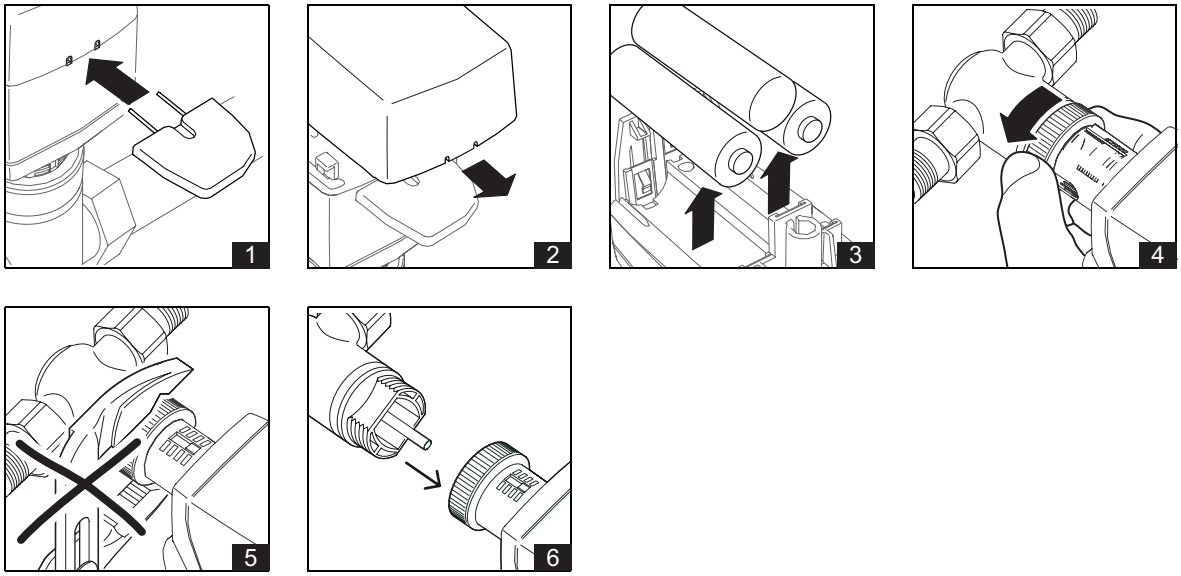

- Open the battery compartment cover using the special key supplied by inserting it into the intended place. Remove the cover.

  The special key is included with delivery of the small actuator.
- Remove the battery.
- Loosen the union nut.
- Remove the small actuator from the valve.

- MD15-FTL-DA

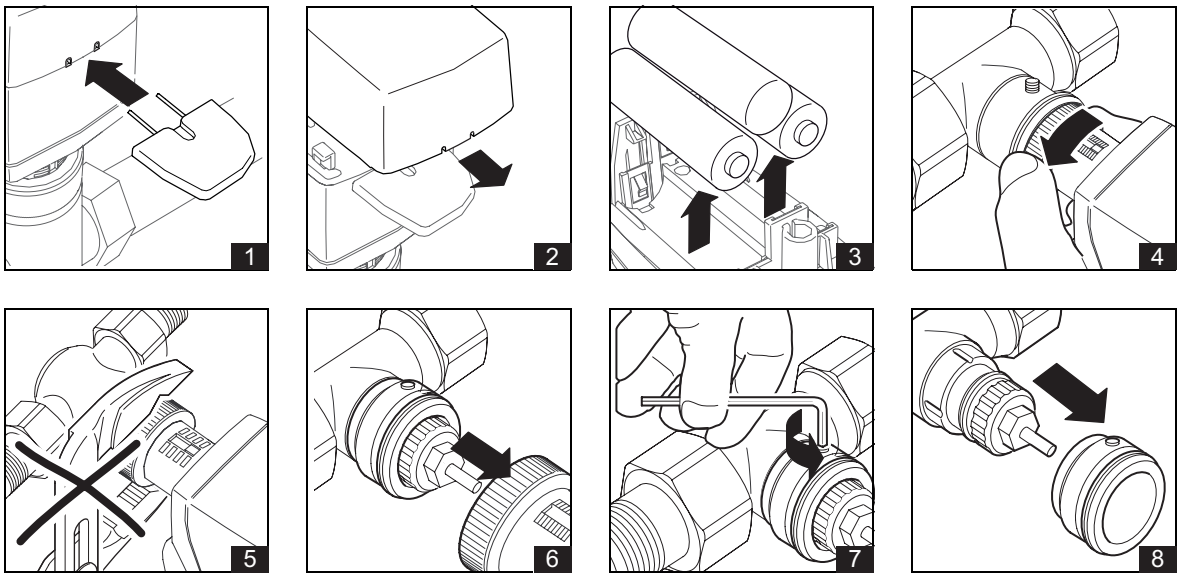

- Open the battery compartment cover using the special key supplied by inserting it into the intended place. Remove the cover.

  The special key is included with delivery of the small actuator.
- Remove the battery.
- Loosen the union nut.
- Remove the small actuator from the valve.
- Loosen the two set screws on the valve adapter.
- Remove the valve adapter.

Commissioning

NOTICE

This product description describes specific settings and functions of the MD15-FLT-xx. In addition to these instructions, the product descriptions of other system components, such as wireless partners, are to be observed.

- The buttons and LED displays that are used during commissioning are located inside the housing.
- Remove the housing cover before commissioning (Figures 1 and 2).

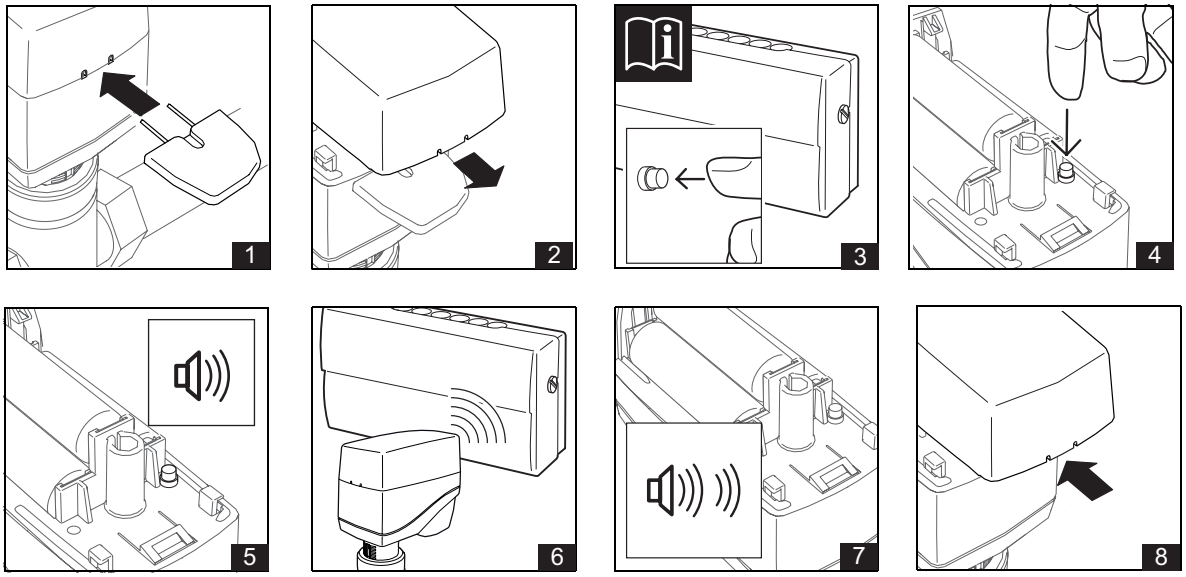

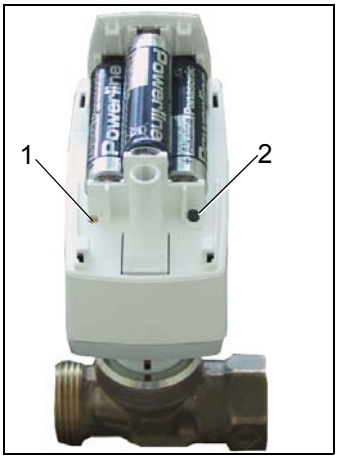

(1) Status LED
(2) Push-button

Teaching in the MD15-FLT-xx on a Radio Partner

- Set the wireless partner to teach-in standby mode (Figure 3, page 18). Details are described in the documentation of the wireless partner.
- Trigger a teach-in telegram on the MD15-FLT-xx by pressing the push-button (2) on the MD15-FLT-xx until a signal tone is heard (Figure 4, page 18).
- Release the push-button (2).

  The teach-in process is started. The status LED (1) flashes for 1 s.

  The wireless partner confirms that the teach-in function was successful. Details are described in the documentation of the wireless partner.

  The wireless small actuator confirms that the teach-in function was successful both visually (status LED lights up for approx. 1 s) and acoustically (2 signal tones in succession).

  An initialization run is automatically carried out.
- Close the housing of the MD15-FLT-xx by snapping on the housing cover (Figure 7, page 18).

NOTE

After the teach-in function has worked successfully, the device ID of the wireless partner is permanently stored in the wireless small actuator. You do not need to perform the teach-in process again if you change the batteries.

Deleting the Radio Partner

It is not possible to delete the device ID of the wireless partner which is saved internally on the MD15-FTL-xx. This ID is overwritten by the new wireless ID when a new teach-in process is performed.

Performing a Communication Test

- Press the push-button (2) and hold it until you hear two successive signal tones.
- Release the push-button.

After releasing the push-button (2), the signal path to the teached-in wireless partner is checked.

A successful communication test is acknowledged audibly by two signal tones in succession.

NOTE

A successful communication test may require an adjustment of the current valve position.

If the communication test is unsuccessful, a long signal tone is emitted and emergency mode is triggered.

NOTE

In case of an unsuccessful communication test, check the wireless partner and the wireless path.

NOTE

If the communication with the wireless partner is interrupted for longer than 1 h, the wireless small actuator switches to emergency mode (see page 5) and the “emergency mode” status bit (self-controlled mode) is activated.

When a correct telegram is received, the wireless small actuator automatically returns to normal operation.

Switching Valve Block Protection On and Off

Switching on

- Press the push-button (2) and hold it until you hear three successive signal tones.
- Release the push-button.

After you release the push-button (2), two audible signal tones are emitted in succession.

Switching off

- Press the push-button (2) until you hear three successive signal tones.

After you release the push-button (2), one long audible signal tone is emitted.

Factory setting: On

Switching the Energy Block (Automatic “Window Open” Recognition) On and Off

Switching on

- Press the push-button (2) and hold it until you hear four successive signal tones.
- Release the push-button.

After you release the push-button (2), two audible signal tones are emitted in succession.

Switching off

- Press the push-button (2) until you hear four successive signal tones.

After you release the push-button (2), one long audible signal tone is emitted.

Factory setting: On

NOTE

If you don’t hear a signal tone after releasing the push button (> 6 s), the function was not carried out. The procedure must be repeated.

Manual adjustment

NOTICE

Manual adjustment may only be performed when the actuator is installed.

- Before manual adjustment, the small actuator must be disconnected from the power supply.
  To do this, at least one battery must be removed from the battery compartment.
- A hexagon key (key socket 4 mm) can be used to move the actuator into any position.

NOTICE

If you manually adjust until the slip clutch responds, turn the hexagon key half a turn in the opposite direction after the manually set stroke position has been reached.

Replacing Batteries

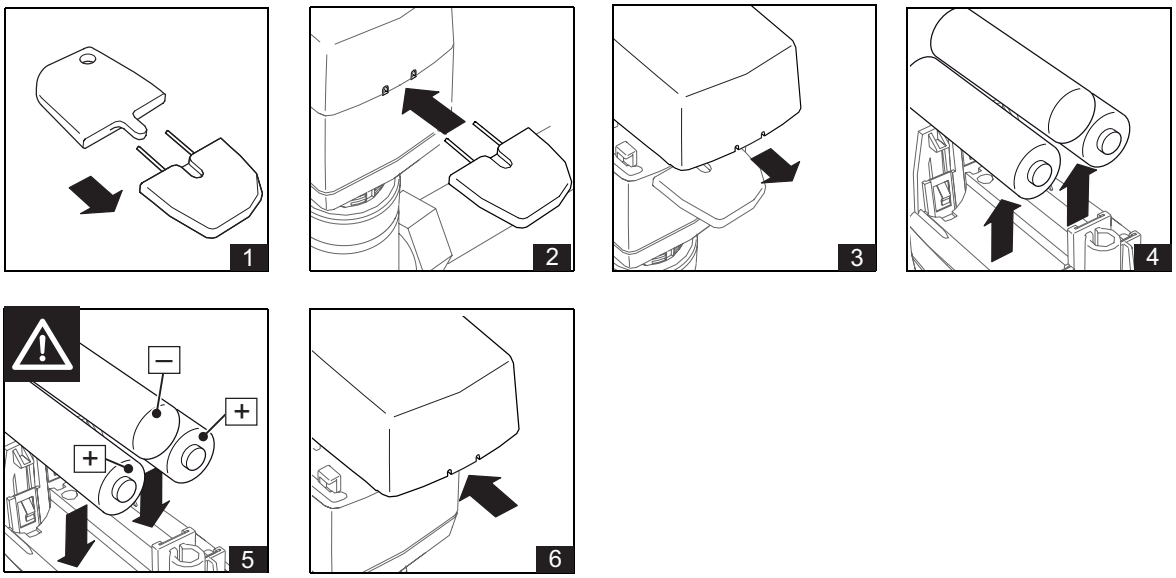

- Open the battery compartment cover using the special key supplied by inserting it into the intended place. Remove the cover.

  The special key is included with delivery of the small actuator.
- Remove the battery.
- Inserting the batteries and close the battery compartment cover.

NOTICE

Insert the batteries with the correct polarity.

When inserting the batteries, observe the polarity as marked in the battery compartment.
Use only alkaline batteries (type: AA, LR6 1.5 V).

NOTE

After changing the batteries, the small actuator goes into storage mode (actuator spindle is retracted).

When the actuator receives a wireless signal, it switches over to normal operation.

NOTICE

If the battery is changed on the disassembled radio actuator, the radio actuator remains operational.

Assembly can only be performed on the valve if no positioning movements are being carried out on the radio actuator.

NOTE

Disposing of batteries in an environmentally friendly manner

Batteries are marked with this symbol. This symbol indicates that it is prohibited to dispose of batteries in the household waste.

Dispose of used batteries at an approved collection point or store in accordance with legal regulations, or follow the applicable guidelines in your country for reducing harmful waste caused by batteries.

Battery disposal at approved collection points is free-of-charge.