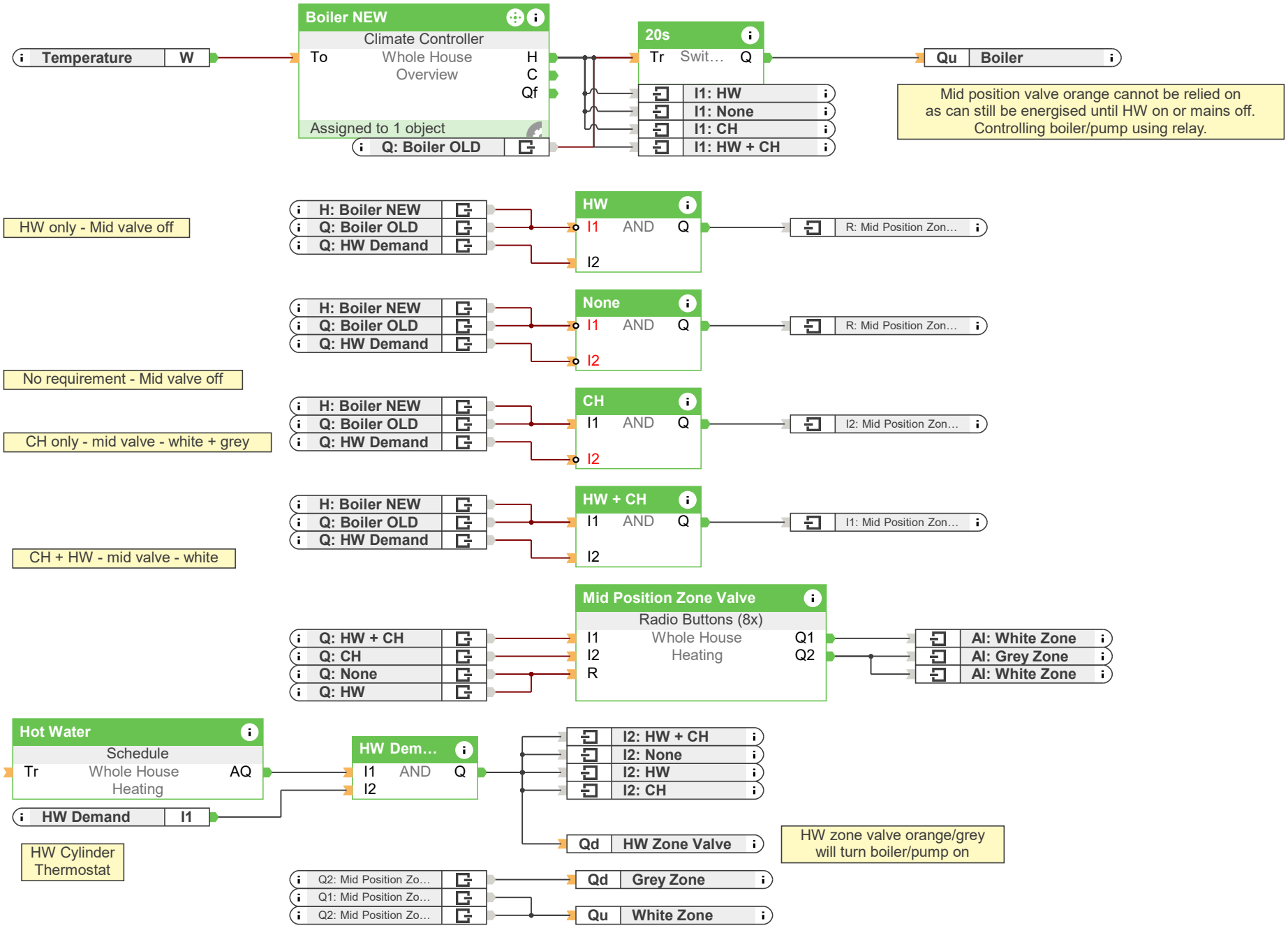
Temperature
W
Boiler NEW
Climate Controller
To
Whole House
Overview
H
C
Qf
Assigned to 1 object
Q: Boiler OLD
20s
Tr
Swit…
Q
I1: HW
I1: None
I1: CH
I1: HW + CH
Qu
Boiler
Mid position valve orange cannot be relied on as can still be energised until HW on or mains off. Controlling boiler/pump using relay.
HW only - Mid valve off
H: Boiler NEW
Q: Boiler OLD
Q: HW Demand
HW
I1
AND
Q
I2
R: Mid Position Zon…
No requirement - Mid valve off
None
CH only - mid valve - white + grey
CH
I2: Mid Position Zon…
CH + HW - mid valve - white
HW + CH
I1: Mid Position Zon…
Mid Position Zone Valve
Radio Buttons (8x)
Whole House
Heating
Q1
Q2
Q: HW + CH
Q: CH
Q: None
Q: HW
AI: White Zone
AI: Grey Zone
AI: White Zone
Hot Water
Schedule
Tr
Whole House
Heating
AQ
HW Dem…
HW Demand
HW Cylinder Thermostat
I2: HW + CH
I2: None
I2: HW
I2: CH
Qd
HW Zone Valve
HW zone valve orange/grey will turn boiler/pump on
Q2: Mid Position Zo…
Q1: Mid Position Zo…
Q2: Mid Position Zo…
Qd
Grey Zone
Qu
White Zone

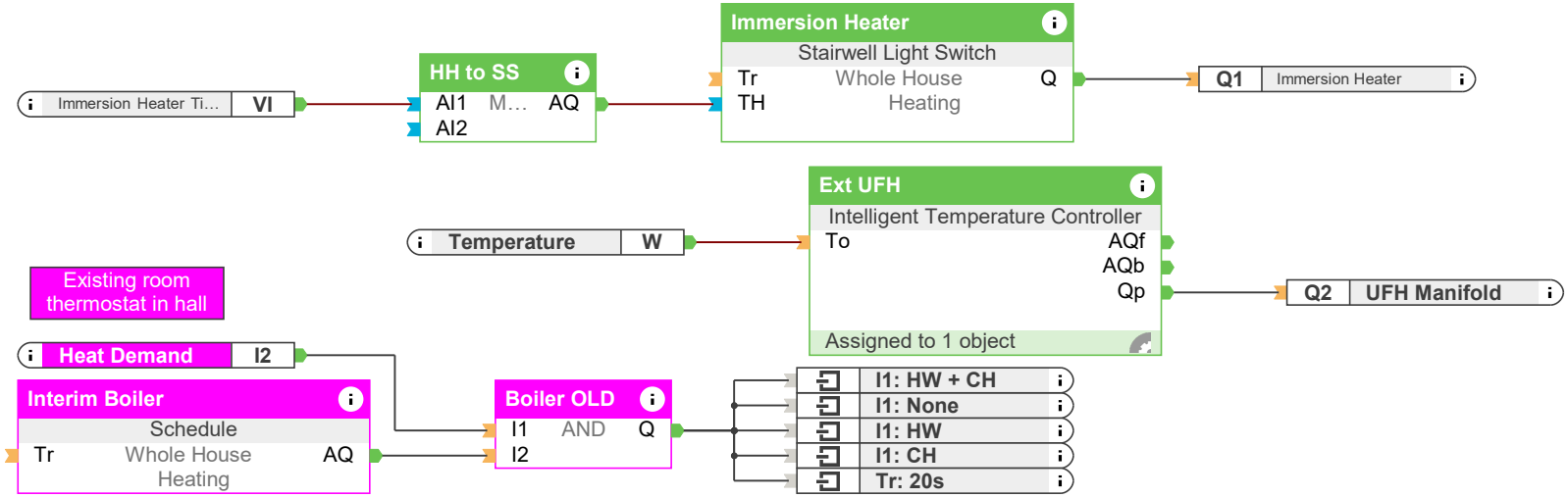
Immersion Heater Ti...
VI
HH to SS
AI1
M...
AQ
AI2
Immersion Heater
Stairwell Light Switch
Tr
Whole House
Heating
Q
TH
Q1
Immersion Heater
Ext UFH
Intelligent Temperature Controller
To
AQf
AQb
Qp
Assigned to 1 object
Temperature
W
Q2
UFH Manifold
Existing room thermostat in hall
Heat Demand
I2
Interim Boiler
Schedule
Tr
Whole House
Heating
AQ
Boiler OLD
I1
AND
Q
I2
I1: HW + CH
I1: None
I1: HW
I1: CH
Tr: 20s