## Technical Specifications

| | |
|---|---|
| **Power Supply** | 9...28VDC SELV or 2x 1.5V AAA batteries |
| **Power Consumption Battery Powered** | typ. 0.02mW, max. 50mW |
| **Power Consumption SELV Powered** | typ. 65mW, max. 85mW |
| **Ambient Temperature** | -20...55°C / -4...131°F |
| **Temperature Detection Range** | -40...125°C / -40...257°F |
| **Humidity Detection Range** | 0...100% r. H. (non condensing) |
| **Radio Frequency** | 868MHz (SRD Band Europe), 915MHz (ISM Band Region 2) max. Power 3.16mW |
| **Safety Rating** | IP20 |
| **Maintenance & Cleaning** | This device is free of maintenance and may only be cleaned with a dry cloth. |

LOXONE

No Gimmicks.
Real Smart Homes.

# Need Help?

loxone.com/support

**Loxone Electronics GmbH**
Smart Home 1
4154 Kollerschlag
Austria

**loxone.com**

LOXONE

# Room Comfort Sensor Air

Part No.: 100264 (White)
Part No.: 100265 (Anthracite)

## About the product

The Room Comfort Sensor Air ensures rooms are always comfortable, by measuring temperature and humidity. Together with the Miniserver, this information can be used to control, monitor and record statistics for the temperature and air quality in a room.

## Features

- Temperature sensor
- Humidity sensor

## Installation

You can power your Room Comfort Sensor Air by using the AAA batteries provided or by powering it up with SELV. If using batteries, pull off the orange/white Power Supply clamp and insert the provided AAA batteries. There are two mounting options, freestanding and wall-mounted. To configure for freestanding use, attach the back cover provided. If wall-mounted, you have the option to use SELV to power your device. Fix the mounting plate to your back box.

If powering by SELV, connect power to the Room Comfort Sensor Air through the frame. Place the Room Comfort Sensor including the frame on top of the mounting plate and gently push to clip into place. Once powered up, configure the Room Comfort Sensor in the usual easy way with Loxone Config.

For additional information, declaration of confirmity, visit www.loxone.com/help/room-comfort-sensor-air

## Wire Specifications

| | |
|---|---|
| **Wire Diameter** | 0.25...0.8mm² / 23...18AWG |
| **Exposed Wire Length** | 5mm / 5/32" |
| **Push-In-Technology** | To make a connection, insert the wire; to remove the wire twist and pull at the same time. |

## Information

Contains FCC ID: COR-ZWIR4512AC1

This device complies with part 15 of the FCC Rules.

Operation is subject to the following two conditions:
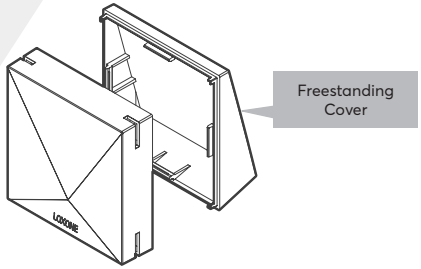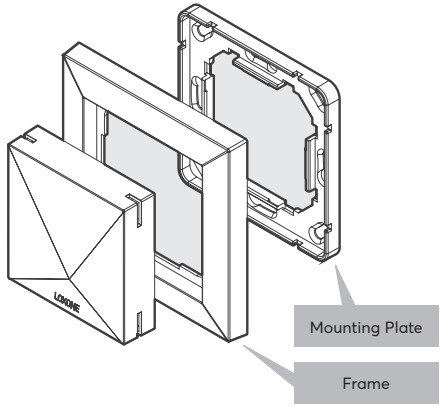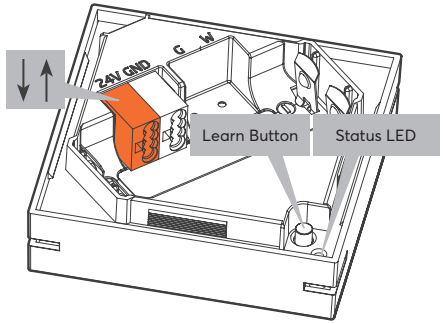
1. This device may not cause harmful interference
2. This device must accept any interference received, including interference that may cause undesired operation